mitrionics

Mitrionics MVP620/622 Hybrid Computing Server

Dual Coprocessor System

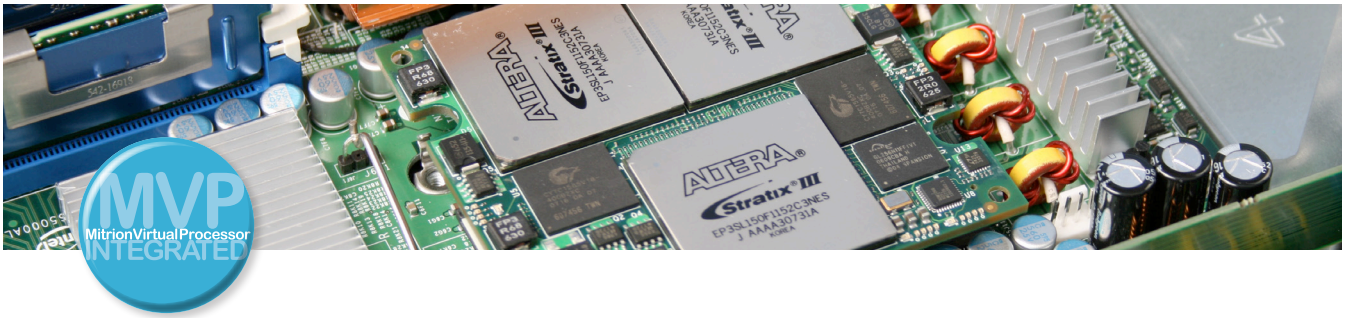

Mitrionics hybrid computing servers combine the Mitrion™ Software Acceleration Platform with servers and FPGA acceleration coprocessor modules from leading vendors to deliver preconfigured solutions for running and developing accelerated applications.

Mitrionics MVP620 and MVP622 are dual FPGA systems based on a dual socket rack mount server, and an in-socket FPGA module, ideally suited for compute and floating point intensive applications.

The system includes:

- Mitrion Virtual Processor
- Mitrion Software Development Kit
- **MVP620:** Intel® SR1550ALR dual socket server with single 2.5GHz quad-core Intel® Xeon® CPU
- **MVP622:** SuperMicro 6015TW dual socket server with single 2.5GHz quad-core Intel® Xeon® CPU
- XtremeData™ XD2000i in-socket FPGA accelerator with dual Altera® Stratix® III FPGAs
- One year of e-mail support

The Mitrion Virtual Processor
The core of Mitrionics' hybrid computing solutions is the Mitrion Virtual Processor, a fine-grained, massively parallel, configurable processor.

Mitrion Software Development Kit
The Mitrion SDK is a complete development environment for Mitrion-C applications. It includes a Mitrion-C compiler, a graphical simulator and a processor configuration unit as well as the Mitrion Virtual Processor architecture and all required software from Altera®, to provide a complete solution for creating configuration files for the FPGAs.

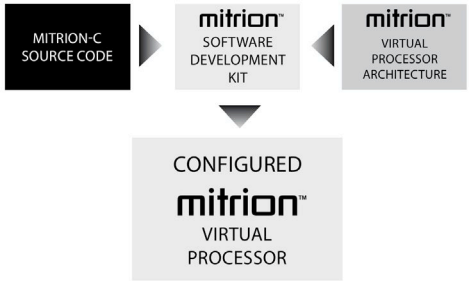

Software written in the Mitrion-C programming language is compiled into a configuration of the processor. The configured processor is then downloaded and run in the target FPGA. The Mitrion Virtual Processor completely separates the software from the FPGA hardware it is running on. This allows a true high-level software approach to implementing computational algorithms on FPGAs.

Specifications

MVP620

Intel® SR1550ALR

CPU
Single Quad-Core
Intel® Xeon® Processor E5320
(2.5 GHz)

Memory
4GB DDR2 667 (2x2GB)

Storage
250GB 7200 RPM SATA-HDD

Networking
Dual-port Gigabit Ethernet

Power
650 W Power Supply
(Non-Hot Plug, Autoswitching)

Linux OS
CentOS 5.1

Rack Height
1U

MVP622

SuperMicro 6015TW

CPU
Single Quad-Core
Intel® Xeon® Processor
E5320 (2.5 GHz)

Memory
4GB DDR2 800 (2x2GB)

Storage
250GB 7200 RPM SATA-HDD,
DVD/CD-RW

Networking
Dual-port Gigabit Ethernet

Power
980 W Power Supply
(Non-Hot Plug, Autoswitching)

Linux OS
RedHat Enterpise Server 4.0

Rack Height
1U

*Single Node Configuration

Coprocessor Module

XtremeData XD2000i

FPGAs
Dual Altera® Stratix™ III 3S260E

Logic Size
508,800 (4LUT equivalents)

Memory
16 MB SRAM
(1 bank per FPGA,
350 MHz QDR II+,
36 bits/bank,
1.6 GBps/port)

System Bus
1066 MHz FSB

Software

Mitrion™SDK
Includes Mitrion-C Compiler, Graphical Simulator, Mitrion Virtual Processor Configuration Unit, MITHAL, Examples and Altera® Quartus® II synthesis and place & route software.

Mitrionics MVP620 and MVP622 are populated with one Intel® Xeon™ processor and one XtremeData XD2000i FPGA Coprocessor Module. The XD2000i uses the motherboard's existing CPU infrastructure to create a full-featured environment for FPGA coprocessor functions. The high-bandwidth, low-latency FSB link between the XD2000i and the CPU enables tightly-coupled FPGA acceleration of x86 applications.

System overview

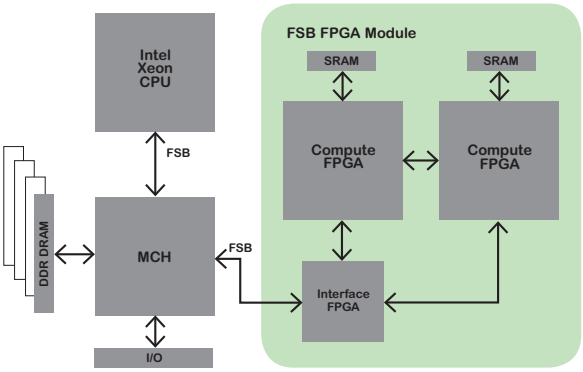

mitrion™ by mitrionics

North America
20 No. Santa Cruz Ave, Los Gatos,
CA95030, USA
Phone (408) 395-3247
info@mitrionics.com
www.mitrionics.com

Europe
Scheelevägen 17,
SE-223 70 Lund, Sweden
Phone +46 (0)46 286 2590
info@mitrionics.com
www.mitrionics.com

Mitrion and the Mitrion logo are registered trademarks, and Mitrion Platform, Mitrion Virtual Processor, Mitrion Software Development Kit are trademarks of Mitrionics AB. All other trademarks are the property of their holders.